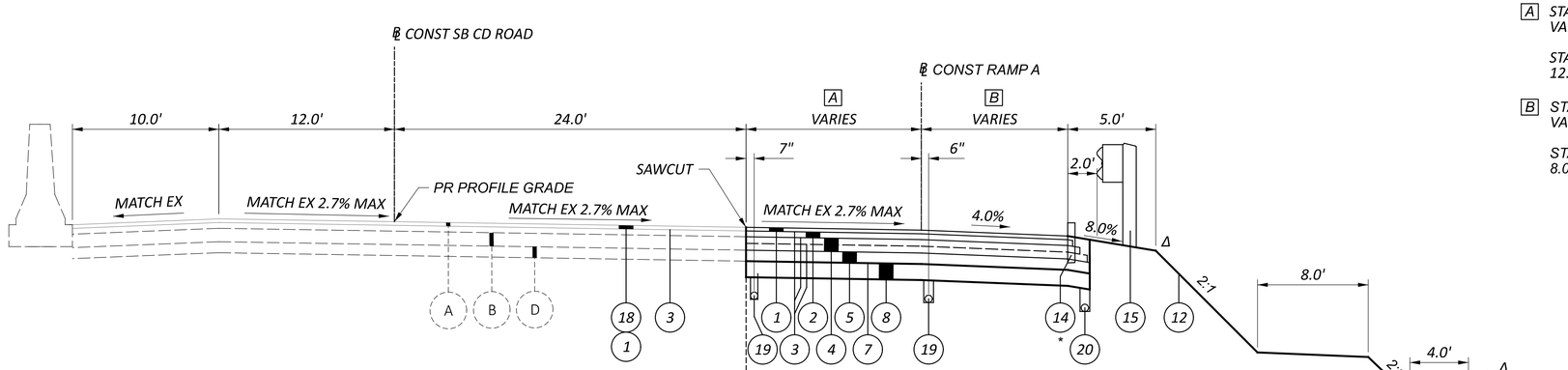


PROPOSED SECTION - SB CD ROAD (SUPERELEVATED)

STA 1367+27.29 TO STA 1376+25.00

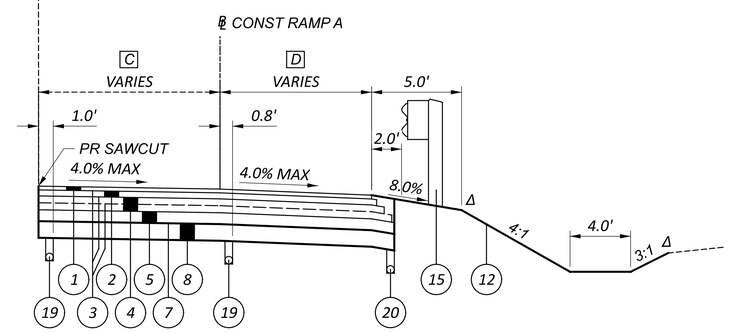


SECTION APPLIES:
STA 1372+50.00 TO STA 1376+25

A STA 1367+27.29 TO STA 1368+30.15
VARIES 0.0' TO 12.0'

STA 1368+30.15 TO STA 1372+50.00
12.0'

B STA 1367+27.29 TO STA STA 1367+56.04
VARIES 12.0' TO 8.0' (NDC 10.0')

STA 1367+56.04 TO STA 1372+50.00
8.0' (NDC 10.0')

C STA 1372+50.00 TO STA 1373+00.00
12.0'

STA 1373+00.00 TO STA 1376+25.00
VARIES 12.0' TO 14.0'

D STA 1372+50.00 TO STA 1372+52.53
8.0' (NDC 10.0')

STA 1372+52.53 TO STA 1373+02.84
VARIES 8.0' (NDC 10.0') TO 10.0'

STA 1373+02.84 TO STA 1376+25.00
10.0'

* CURB APPLIES STA 1367+27.29 TO STA 1367+40.07
AND GUARDRAIL SHALL BE FLUSH WITH CURB FACE

Δ 4' ROUNDING

SEE SHEET 4 FOR EXISTING BUILDUP ITEMS
SEE SHEET 9 FOR PROPOSED BUILDUP ITEMS

# PROPOSED TYPICAL - 270 SB CD ROAD

DESIGN AGENCY
EMH&T

DESIGNER
BMM

REVIEWER
SJB 01/16/23

PROJECT ID
113663

SHEET 10 TOTAL 95

FRA-270-32.92

MODEL: Prop Typical 2 [Sheet] PAPERSIZE: 34x22 (in.) DATE: 1/16/2023 TIME: 11:05:53 AM USER: bmiller
J:\2020\0412\ODOT\02_FRA-270 SB at Easton Way\FRA\113663\400-Engineering\Roadway\Sheets\113663_GY002.dgn